Heatless Regenerative Desiccant Dryers

i.DC 16 – i.DC 1555 Series

From frost protection to high-tech applications

Flow rate: 1.6 to 155.5 m³/min; Pressure 5 to 16 bar

www.kaeser.com

i.DC 16 – 1555 series

From frost protection to high-tech applications

Desiccant dryers from the i.DC series can lower the pressure dew point of the compressed air to -70 °C. They combine reliable system design, impressive energy efficiency and exceptionally low maintenance costs.

Enjoy dependable frost protection for your control valves and lines while producing dry compressed air for sensitive processes with minimal total costs.

Reliable and compact

With i.DC series desiccant dryers, high-quality components ensure optimum drying results at all times. For example, the changeover valves are specifically dimensioned to withstand an exceptionally high number of pressure load cycles. Moreover, only premium-quality, water-resistant desiccants are used, which are dust-free and have a uniform particle size distribution to provide an optimally active adsorption surface. Efficient KAESER FILTER products protect the desiccant and ensure high air purity downstream from the dryer. Any accumulating condensate is reliably and efficiently drained away by the prefilter's electronically level-controlled ECO-DRAIN. All models are installed on a rugged, space-saving frame.

High efficiency – low pressure dew points

The radial arrangement of the inlets and outlets permits an elongated chamber design with compact dimensions, creating highly efficient airflow conditions for energy-efficient drying. Minimal pressure losses are achieved thanks to generous flow cross sections and efficient KAESER FILTER products. The ECO CONTROL 3 dew point trend recognition control offers outstanding energy-saving potential (see page 9 of this brochure).

ECO CONTROL 3 – efficient and network-capable

The standard-equipped, network-capable controller with 7" touch display provides comprehensive, state-of-the-art system monitoring through an extensive reporting system with event memory, graphic display of the time curve for all process parameters, as well as a P&I diagram with integrated real-time data. For energy-saving operation, even the standard version is equipped with dew point trend recognition control. In addition, a factory-installed, integrated pressure dew point sensor is available, which enables display and transmission of the measured value. In this way, the desired pressure dew point can be defined as a control variable.

Efficient design enables efficient operation

KAESER ensures uncompromising efficiency even with the standard version of the i.DC series. The ECO CONTROL 3 controller and dew point trend recognition control ensure maximum energy savings during partial load operation. Generous dimensioning of the heatless regenerative desiccant dryer (e.g. 10-minute cycle for PDP of -40 °C) and the consistent use of high-quality components (e.g. durable valve technology and long-lasting premium desiccant) guarantee efficient operation with minimal maintenance requirement (e.g. inspection every 5 years).

The advantage?
Minimal total costs, maximum savings.

Image: DC 140 – 14.0 m³/min with ECO CONTROL 3 controller

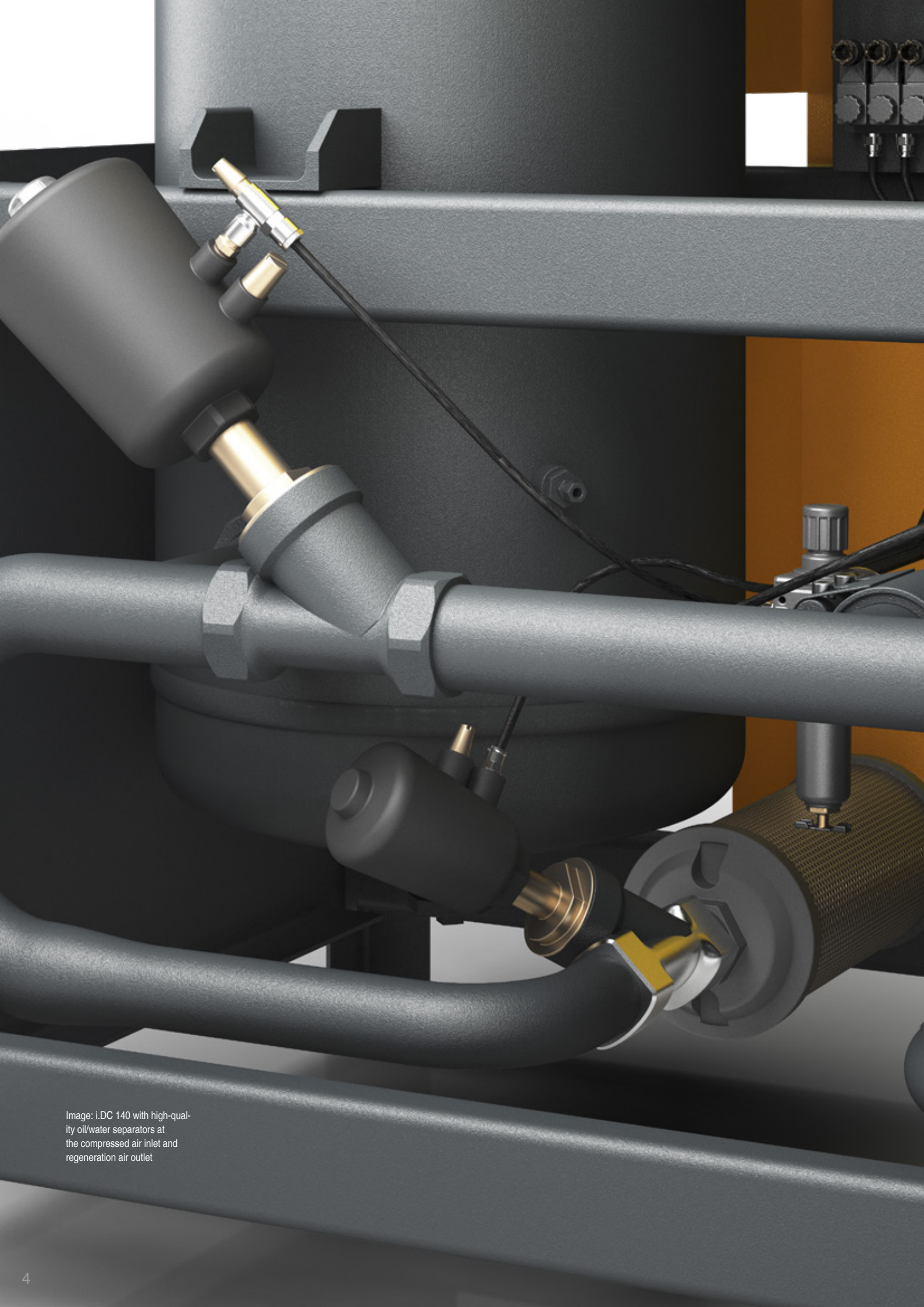

Image: i.DC 140 with high-quality oil/water separators at the compressed air inlet and regeneration air outlet

i.DC 16 – 1555

Reliable, advanced and compact

Desiccant dryers are often selected for sensitive applications requiring maximum compressed air availability. To ensure the necessary reliability, i.DC desiccant dryers therefore use premium-quality materials and components.

Durable desiccant chambers

In accordance with the AD regulations, the desiccant chambers are rated for 1 million load cycles at a 10 bar pressure differential and thus for continuous operation of at least 10 years. Internal stainless steel flow distributors and corrosion-resistant exterior surfaces contribute to the outstanding durability of the chambers.

Long-lasting desiccant

KAESER i.DC dryers feature exceptionally generous fill volumes. Moreover, the desiccant supplied with the units ensures outstanding pressure stability and resistance to liquid water. This keeps pressure dew points reliably low, even under demanding operating conditions.

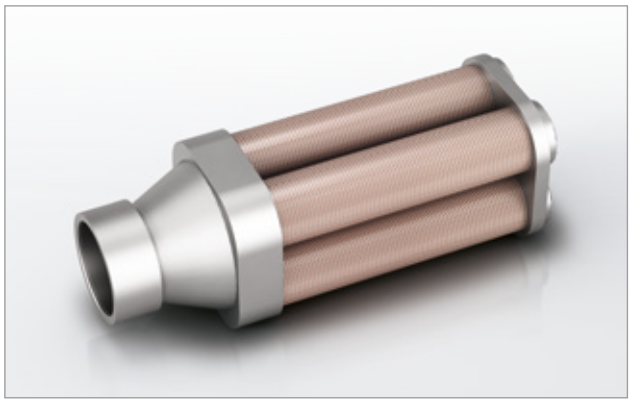

Complete regeneration

i.DC dryers are always equipped with two highly effective silencers. The large filtering surfaces ensure dust-free and complete pressure reduction, substantially enhancing regeneration efficiency. An integrated overload valve indicates when maintenance is required. In addition, i.DC dryers are available with a special sound insulation option.

Rugged and compact design

Thanks to a robust frame with an earthing screw, i.DC dryers are fully protected and easy to transport (equipped with a lifting eye from size i.DC 175 upward). Packages up to the i.DC 140 particularly impress with their compact design.

i.DC 16 – 1555 series

Low-maintenance design

KAESER truly understands its customers' needs, since the company itself operates numerous compressed air stations. From first-hand experience, we are well versed in every aspect of compressed air station planning, commissioning, operation and maintenance. We draw on this expertise to create user-friendly and low-maintenance products.

Long-lasting desiccant

Thanks to premium quality, high pressure stability and generous fill volumes, we are able to recommend an outstanding 5-year service life for the desiccant in i.DC dryers. Its physical stability in the presence of liquid water also means that i.DC dryers generally need to be filled only once. Potential confusion during servicing and mixing during refilling are therefore eliminated.

Service-friendly valve technology

The valves and flaps in i.DC dryers are specifically designed for wide fluctuations in pressure load and low pressure losses. Thanks to the excellent quality of these units, they generally require maintenance only after five years. In addition, maintenance of the flow-optimised, individual valves and flaps is much easier and more reliable than with the more common multi-port valves.

Easy filling and emptying

The radial arrangement of the chamber inlets and outlets enables easy and straightforward desiccant replacement using the large filler ports. These ports are also easily accessible for chamber inspections.

Important pressure levels at a glance

The front panel of every i.DC dryer is fitted with three pressure gauges to display the chamber pressures and the inlet pressure at the regeneration air orifice. Another pressure gauge at the rear of the unit makes it easier to set the regeneration flow rate.

Aluminium shuttle valve and moisture indicator (with separate non-return flaps from size i.DC 175). The valve technology permits the inflow of dried compressed air for regeneration when the system is shut down – with no need for a return air line.

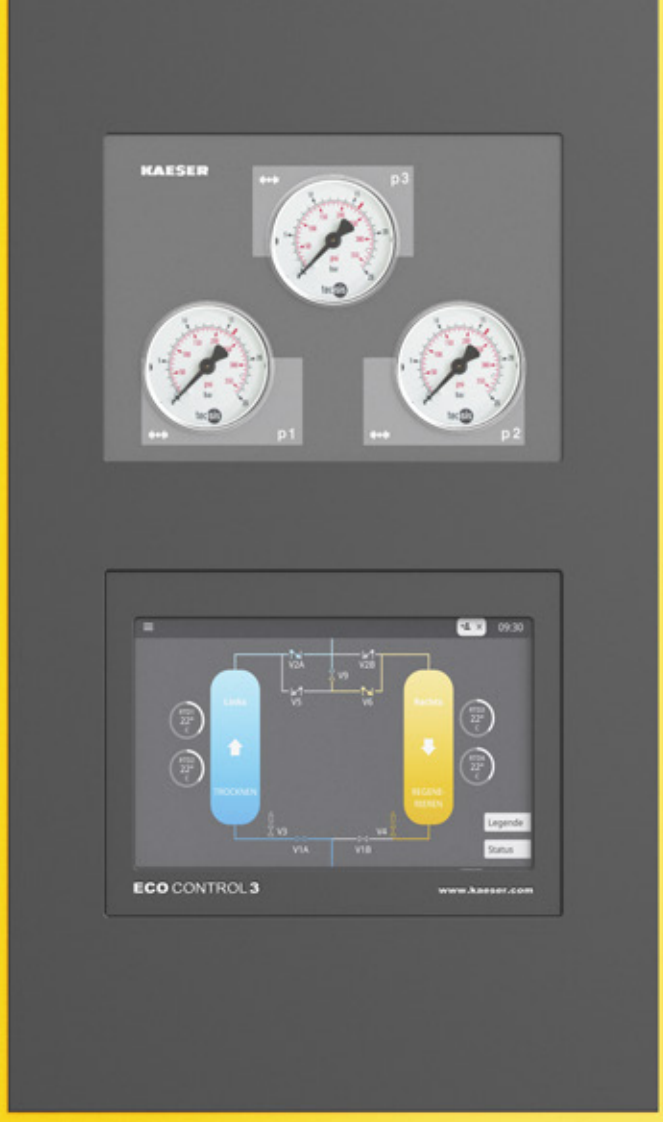

i.DC 140

KAESER

Image: i.DC 140 with ECO CONTROL 3 and pressure gauges – user-friendly control element layout

i.DC 16 – 1555

High efficiency – low pressure dew points

The provision of pressure dew points below 0 °C is generally demanding. That makes it even more important to draw on our decades of experience in the design of our i.DC desiccant dryers and use high-quality components throughout. This ensures outstanding energy efficiency across the entire performance range.

Long desiccant chambers

The radially mounted piping provides a compact system design with a maximised chamber length. This optimises the duration of contact between the compressed air and the desiccant, thereby ensuring optimal use of the desiccant capacity. It also results in material-friendly airflow speeds, which saves on regeneration air and reduces service costs.

Exceptionally low pressure loss

Thanks to generously dimensioned flow cross sections and efficient KAESER FILTER products, i.DC series dryers deliver outstanding performance with minimal pressure losses. The excellent particulate retention capacity of the pleated filter elements also means that pressure losses remain low throughout their entire service life.

Dew point trend recognition control

i.DC dryers are available with the **ECO CONTROL 3** dew point trend recognition control. Through the demand-based utilisation of regeneration air, it offers substantial energy-saving potential under partial load conditions. It also offers comprehensive system monitoring and reporting, as well as a Modbus TCP interface connection to the KAESER SIGMA NETWORK.

Integrated pressure dew point sensor

Models can be optionally equipped with an integrated pressure dew point sensor. This allows the pressure dew point to be displayed, transmitted, and also used as a control variable, alternatively to trend recognition. A practical advantage of this is that even if the sensor does not deliver a signal, for example due to calibration, load-dependent control remains possible.

i.DC 140
KAESER
KAESER
SK 25

i.DC 140
KAESER

How it works

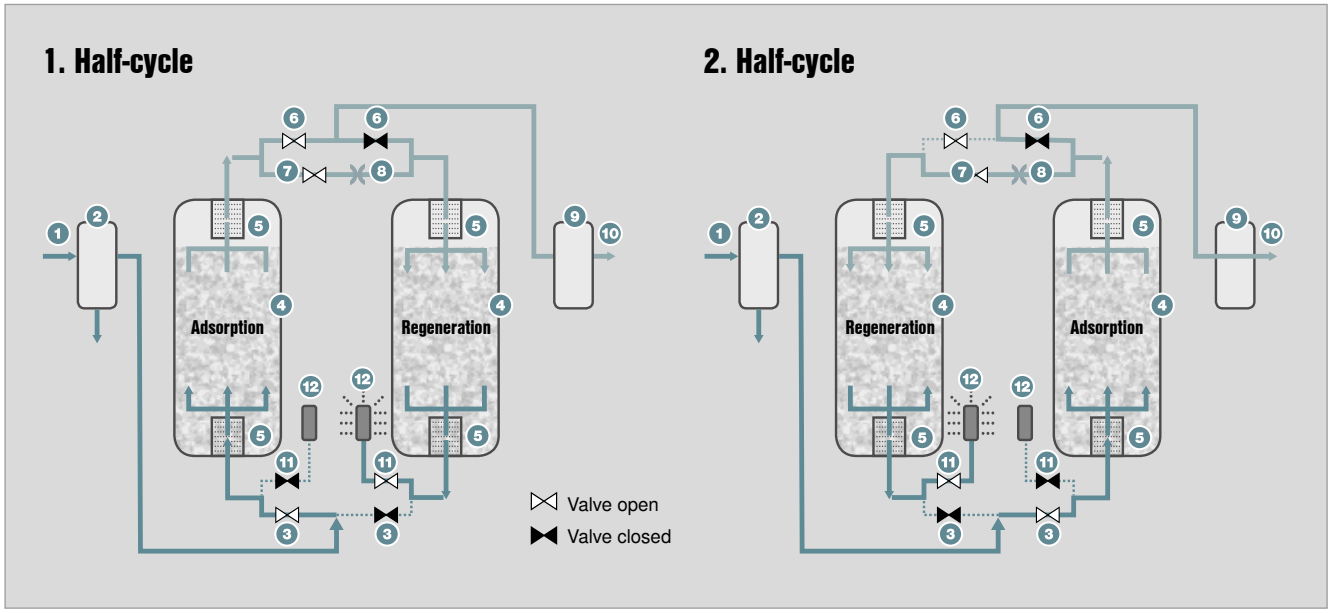

(1) Compressed air inlet
(2) Prefilter
(3) Compressed air inlet valve
(4) Desiccant chamber with desiccant
(5) Flow distributors
(6) Compressed air check valve
(7) Regeneration air adjustment valve
(8) Regeneration air orifice
(9) Afterfilter
(10) Compressed air outlet
(11) Regeneration air discharge valve
(12) Silencer

Desiccant: Activated alumina

The right choice – with certainty!

The i.DC series uses only activated alumina – a highly pressure-resistant material with excellent mechanical stability, that requires minimal energy for regeneration. As compared with molecular sieve dryers, for example, i.DC series dryers typically require up to 20% less regeneration air to maintain a pressure dew point of -40°C.

In addition, only top-quality desiccants are used, consisting of uniform beads with minimal dust formation. This ensures that the desiccant bed channels remain dust-free, even with shifting airflows, for maximum capacity utilisation. Moreover, thanks to the stability of the desiccant material in the presence of liquid water, multi-stage filling can also be dispensed with in i.DC series desiccant dryers. Apart from making servicing easier, this also enhances operational safety under extreme working conditions, since it absorbs significantly less water than other desiccants without sintering and therefore can be regenerated swiftly. As a result, the original pressure dew point can be restored much more quickly.

A further advantage: it can also be replaced at relatively moderate cost.

i.DC 16 – 1555

High efficiency – low pressure dew points

ECO CONTROL 3 saves considerable energy, especially with variable flow rates, pressures or temperatures. Three operating modes can be selected:

Dew point trend recognition control

This operating mode is cost-effective, maintenance-free, and extremely robust. In this mode, temperature changes in the desiccant bed are detected and analysed to determine the desiccant loading condition. If the desiccant in one chamber is fully loaded, a switch is made to the regenerated chamber.

Pressure dew point control

An optional additional pressure dew point sensor is integrated here, which measures the pressure dew point at the compressed air outlet. Once the setpoint is reached, switchover to the regenerated chamber is performed.

In both cases, the chambers are only switched after optimal utilisation of the desiccant. The drying phase can be extended by up to 30 minutes, based on workload, to save regeneration air.

Fixed cycle

In the fixed cycle mode, no load-dependent regulation takes place. In this mode, the cycle time is adjusted by specifying the required pressure dew point level. Example: This means that if a dryer is “upsized” – perhaps with a view to expanding the compressed air station at a future date – the cycle can be transitionally adjusted to save regeneration air.

Operating mode	Fixed cycle	Dew point trend recognition control	Pressure dew point control
Pressure dew point actual value available numerically	No	No	Yes
Pressure dew point setpoint value adjustable	Yes Pressure dew point levels via cycle times: -70°C (4 min) -40°C (10 min) -20°C (16 min)	No Setpoint value always -40°C Cycle time 10 to 30 min	Yes Setpoint value -80 to +10°C Cycle time max. 30 min
Pressure dew point alarm value adjustable	No	No	Yes

ECO CONTROL 3

Stop wasting energy!

Heatless regenerative desiccant dryers should always be sized for maximum compressed air flow, the highest possible inlet temperature and minimal working pressure. This ensures that the desired pressure dew point is maintained across the entire operating range of the compressed air station. Under real-world conditions, however, compressed air requirement, ambient temperatures and network pressure will deviate from the parameters originally specified. The ECO CONTROL 3 controller reacts automatically to these variations and adjusts the dryer's regeneration cycle to the prevailing conditions. **The result: no further waste of dried compressed air as regeneration air, and a pressure dew point at the desired level**.

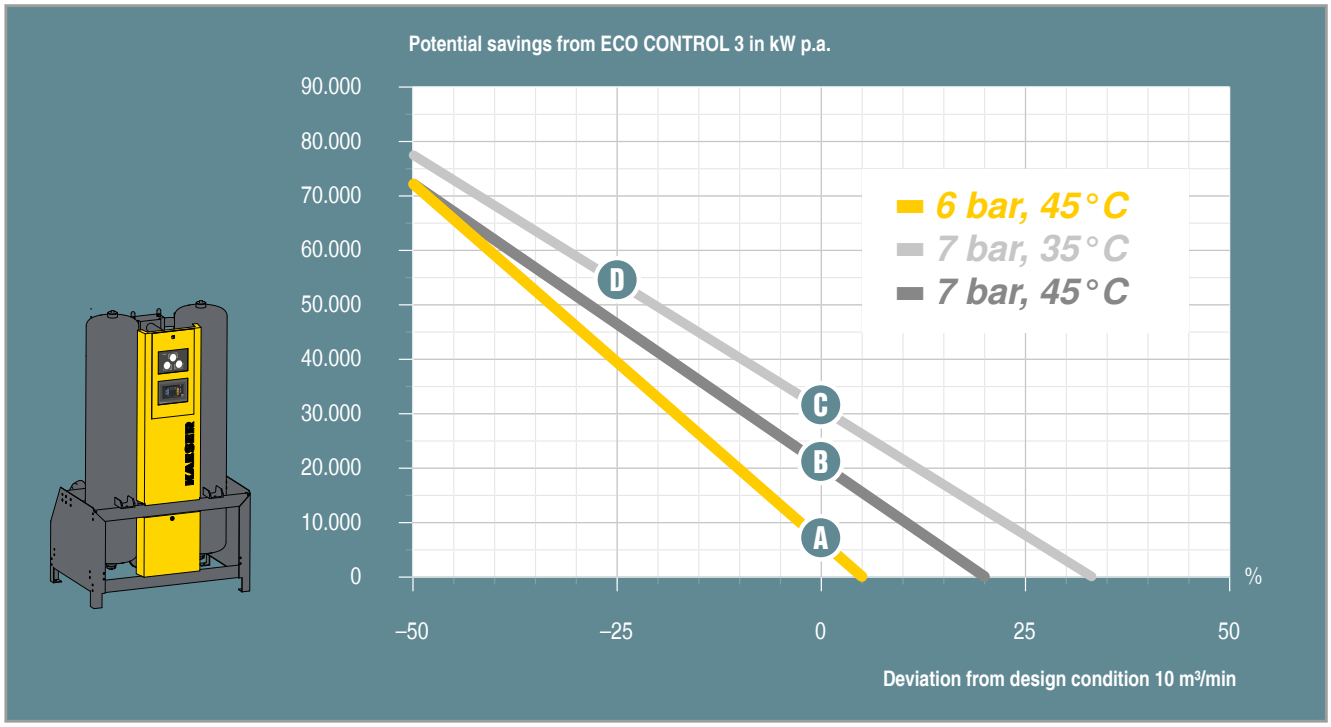

Operating point (A)

The graph illustrates the effect: Using the i.DC 140 desiccant dryer, air is to be dried at a rate of 10 m³/min **at 6 bar and 45 °C** to a pressure dew point of -40 °C. If the dryer runs for 8,760 hours, the ECO CONTROL 3 will save approx. 7,000 kW* compared to a system without dew point control.

Operating point (B)

With **inlet pressure at 7 bar** (e.g. due to a lower actual pressure drop in case of optimal maintenance), less moisture-laden compressed air will enter the dryer due to the lower volume. ECO CONTROL 3 reduces the required regeneration air volume, thereby saving almost 21,000 kW p.a.

Operating point (C)

If the dryer can be operated at an **inlet temperature of 35 °C** (e.g. in winter), further savings are possible, because the compressed air will then absorb even less moisture per m³. Here, too, the ECO CONTROL 3 controller reduces the volume of regeneration air according to actual requirement. Depending on the operating duration at this temperature, potential savings of up to 31,000 kW p.a.* are possible.

Operating point (D)

The ECO CONTROL 3 generates savings even if **compressed air demand deviates from 10 m³/min**. The potential savings can be determined from the graphs corresponding to the respective operating points. For example, if the dryer is operated at 7 bar, 35 °C and 7.5 m³/min (-25% deviation), the potential annual savings exceed 58,000 kW*.

* Basis: Specific package input power of compressor: 6.55 kW/(m³/min)

i.DC 1555
KAESER

ECO CONTROL 3

Reliable. Intelligent. Efficient.

Valve control

Switching sequence monitoring.

ECO CONTROL 3 controls and monitors the valve switching sequence. The correct sequence can also be checked in a manual test mode.

Dew point control

Save energy during partial load.

ECO CONTROL 3 enables two control types. The standard dew point trend recognition control captures the moisture load of the desiccant using maintenance-free temperature sensors and adjusts the cycle times individually to achieve a pressure dew point of -40°C. If the optional pressure dew point sensor is integrated, an individual setpoint value can be defined and regulated accordingly. Only after optimal utilisation of the desiccant, but no later than 30 minutes, switchover to the regenerated chamber is activated before the pressure dew point increases at the dryer outlet. This minimises the need for regeneration air.

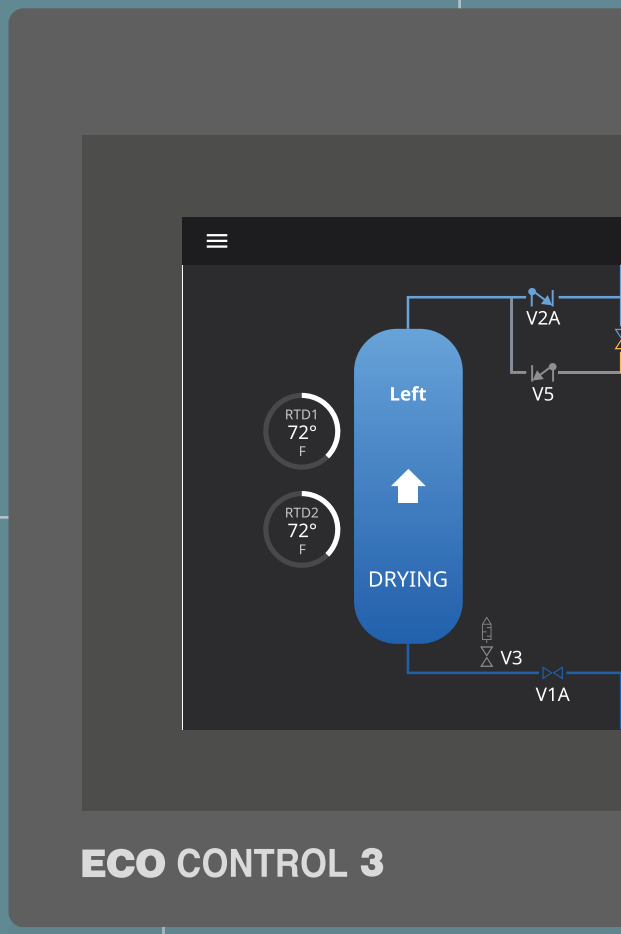

System monitoring

On-site system diagnostics.

The ECO CONTROL 3 provides comprehensive, advanced system monitoring, thanks to an extensive reporting system with event memory, detailed maintenance management, graphic display of the time curve for all temperatures and the pressure dew point (optional), as well as a P&I diagram with integrated real-time data.

Network connection

Pathway to the SIGMA NETWORK.

The ECO CONTROL 3 is equipped as standard with a Modbus TCP communications module, allowing communication with the SIGMA AIR MANAGER 4.0 master controller.

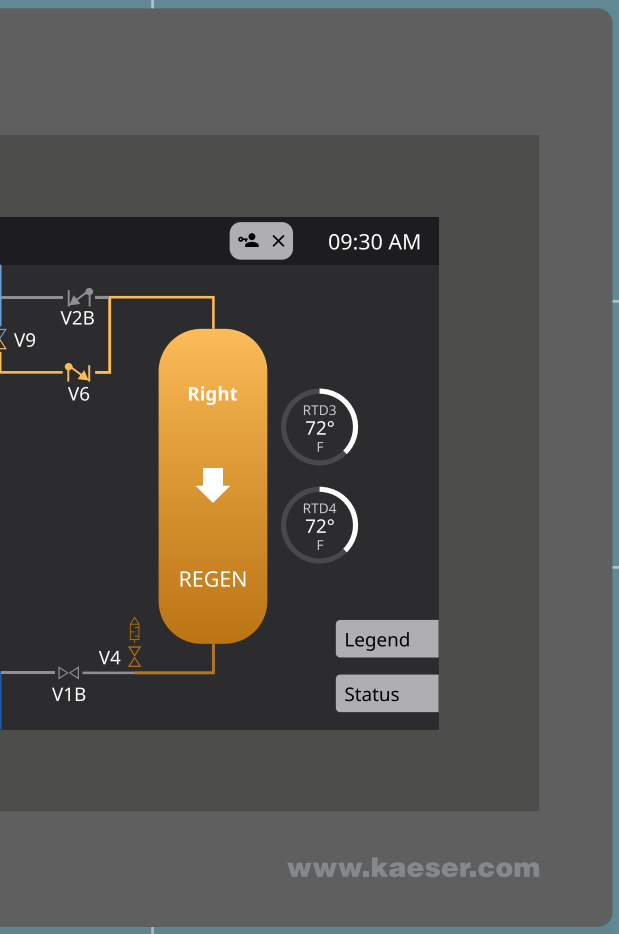

Power supply: 95-240 V
±10% /1 Ph / 50 - 60 Hz

USB interface

Simple updates.

Controller software updates are made easy thanks to the USB interface.

Floating contacts

The hotline.

Contacts are available for fault messages, warnings and operating messages (one contact for each). In addition, two contacts are available to connect the alarm messages from two condensate drains. The remote control (completion of half a cycle before shutdown) can also be operated via a separate contact.

7" touch display

Speaks your language.

The ECO CONTROL 3's clearly structured menu navigation and 7" touch display ensure optimal control over the entire drying process – and is currently already available in 28 languages.

SIGMA AIR MANAGER 4.0

KAESER SIGMA NETWORK

SIGMA CONTROL 2

ECO CONTROL 3

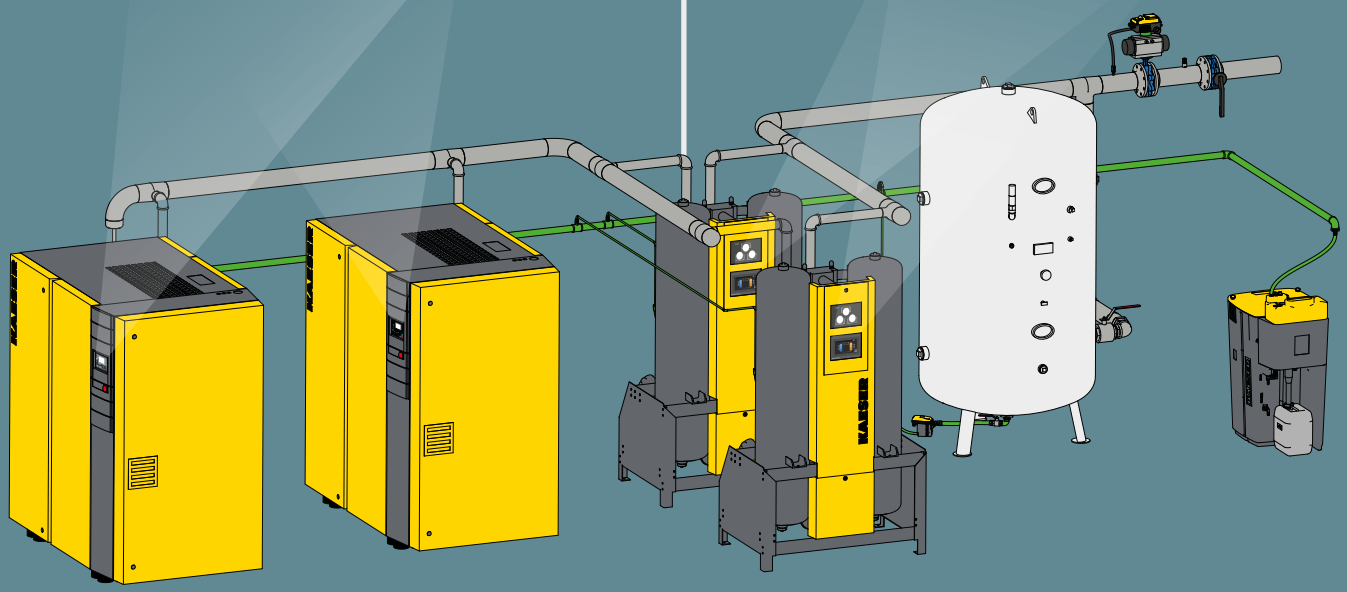

Networked compressed air station

SIGMA AIR MANAGER® 4.0

Compressed air control technology 4.0

“Industrie 4.0” – the key term for the fourth industrial revolution. In addition to the focus on “individualised production processes” and “product-related information exchange”, a further factor is becoming increasingly important: time – because time is money.

Industrie 4.0 is based on digital information technology, interconnecting people and machines, equipment and components. This technological revolution also embraces real-time information exchange – the transfer and analysis of data in real time. It is this capability that provides the decisive competitive advantage. The technology also opens up new value-added potential by ensuring permanent utility and availability, for example, of important industrial equipment.

Identify, analyse, react. In real time.

Adaptive, efficient and networked – demand-oriented compressed air management takes on a whole new meaning with the SIGMA AIR MANAGER 4.0. This advanced master controller coordinates operation of multiple compressors, as well as dryers or filters, with exceptional efficiency.

A patented, simulation-based optimisation process determines future demand based on past compressed air consumption profiles. Thanks to networking of all components in the compressed air station via this intelligent master controller and the secure KAESER SIGMA NETWORK, comprehensive monitoring, energy management and predictive maintenance are all possible.

The SIGMA AIR MANAGER 4.0 enables comprehensive compressed air station monitoring through the recording, archiving and visualisation of operating data. Complete station parameter tracking means that faults can be detected early on and rectified immediately.

The SIGMA AIR MANAGER 4.0 records, archives and processes the compressed air station’s operating data and provides active support for energy management activities as per ISO 50001. The required key figures are automatically exported, evaluated and delivered in the form of a report.

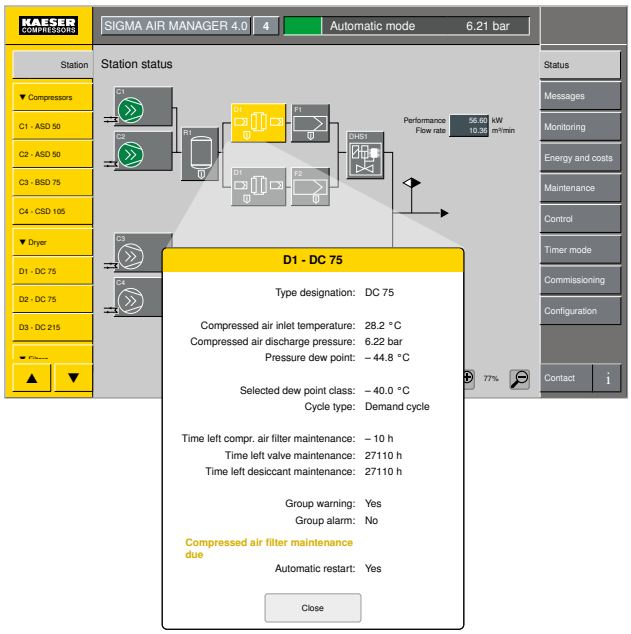

Can be integrated into the SIGMA NETWORK

The ECO CONTROL 3 controller features an integrated Modbus TCP interface. This makes it possible to connect DC series dryers to the SIGMA NETWORK. All essential operating parameters and messages are available in real time. The result: maximum availability with minimal costs. In addition, the SIGMA AIR MANAGER 4.0 provides a complete overview of all essential operating parameters for the desiccant dryers. Colour-coded warnings and alarms are displayed in the compressed air station’s flow diagram. By pressing the dryer icon, the user can display important operating parameters and message texts in SIGMA AIR MANAGER 4.0.

i.DC 16 – 1555

Reliable, service-friendly and efficient

High-performance desiccant chambers

Continuous operation >10 years (as per AD regulations with Δp 10); exterior coating (DIN EN ISO 12944 C2); stainless steel flow distributors; maximum chamber length and compact system design thanks to radially mounted piping (material-friendly flow speeds; optimal contact times for maximum utilisation of desiccant capacity; low regeneration air requirement)

Minimal regeneration air volume

Two openings for optimal adjustment to the working pressure range; precise flow rate setting via inlet pressure at regeneration air orifice using a valve and pressure gauge

KAESER FILTERS: Minimal pressure loss

Generous nominal widths contribute to low overall system pressure loss; KE coalescence filter as prefilter for max. desiccant service life; prefilter with ECO-DRAIN 31; KD particulate filter as afterfilter catches abraded desiccant material; from size i.DC 175 with flange connection

High-quality valve technology

Recommended maintenance interval: five years; maintenance of individual valves is simple and reliable; low pressure losses – lower than with multi-port valves; generous nominal widths; aluminium shuttle valve up to size i.DC 140; designed for fluctuating pressures; configurable valve settings in case of power outage; dry air return as regeneration air without return air line (intermittent operation)

Stable frame

Easy and safe to transport; equipped with a lifting eye from size i.DC 175 upwards

Important pressure readings at a glance

Front: pressure levels in both chambers; inlet pressure at regeneration air orifice; rear: inlet pressure at regeneration air orifice

ECO CONTROL 3 – network-enabled

Substantial potential energy savings under partial load conditions; integrated interface for connection to the KAESER SIGMA NETWORK; comprehensive system monitoring and reporting

Easy filling and emptying

Separate openings to fill and empty the chamber; excellent access for inspections

Efficient desiccant

Generous filling volumes; easy regeneration; recommended replacement interval: five years; dust-free premium quality; uniform bead size; stable in the presence of liquid water; single-layer filling; high pressure stability

Complete regeneration

Two highly effective silencers; generous filter surfaces; with overload valve

ACT activated carbon adsorber

Available in sizes from i.DC 16 upward, i.DC dryers are equipped with an ACT activated carbon adsorber that is precisely matched to meet dryer capacity. This enables production of oil-free compressed air that meets the highest quality standards (ISO 8573-1 Class 1 residual oil content). The frame construction (up to i.DC 140) makes it easy to connect the ACT activated carbon adsorber.

Optional silencer ≤ 85 dB(A)

i.DC desiccant dryers are optionally available in a special version with enhanced soundproofing. This reduces the air discharge sound levels to a maximum of 85 dB(A). In addition, models up to i.DC 140 size with mesh base are equipped with a housing lined with acoustic foam. From model i.DC 175 and upward, the two silencers are housed in a special silencing cabinet.

Equipment

Base frame

Base frame with earthing screw; lifting eye (from i.DC 175)

Prefilter

KAESER KE coalescence filter with mechanical differential pressure gauge and ECO-DRAIN electronic condensate drain; filter mounted on dryer; condensate drain electrically connected; warning message linked to the controller's group warning

Compressed air inlet pipe – lower pipe bridge

Piping system with two compressed air inlet valves per chamber (up to i.DC 140: angle seat valves, from i.DC 175: butterfly valve with actuator), associated quick-venting valves (for i.DC 52 to 140), two regeneration air discharge valves and two silencers

Desiccant chamber

Two desiccant chambers with easily accessible filling and emptying openings; each with stainless steel distributors and desiccant filling

Compressed air discharge pipe – upper pipe bridge

Piping system with shuttle valve (up to i.DC 140) or two non-return flaps (i.DC 175 and upward) and moisture indicator

Afterfilter

KAESER KD particulate filter with mechanical differential pressure gauge and manual condensate drain; filter mounted on dryer

Regeneration air diverter

Piping system comprising two check valves (i.DC 175) or two non-return flaps (from i.DC 225 upward), a valve to set the regeneration air volume, a pressure gauge and two regeneration air orifices; flap for pressure dew points -40, -20, +3 °C and gauge pressure up to 10 bar and for pressure dew point -70 °C, pre-installed

Control air supply

Pressure regulator and pressure gauge, as well as valve block for control air supply of internal valves and flap actuators

Two-part front panel

Chamber pressure gauge; pressure gauge for inlet pressure at regeneration air orifice; ECO CONTROL 3 controller

Interfaces

Modbus TCP (Ethernet); floating contacts: operating message, group warning, group fault and remote control

Sensor / electrical systems

Monitoring pressure switch to monitor venting pressure in each desiccant chamber (two temperature sensors per chamber; electrical equipment in compliance with EN 60204-1; IP54 protection rating; 2m power cable with plug (CEE 7/7); halogen-free wiring throughout; pressure gauge on front panel connected via control air lines

Views

Technical specifications

Models DC 12 to 1545

Model	Flow rate *) m³/min	Pressure dew point °C	Gauge pressure *) bar	Ambient temperature °C	Compressed air inlet temperature °C	Dimensions W x D x H mm	Weight kg	Compressed air / regeneration air connection	Power supply
i.DC 16	1.60	-40	5 – 16	+2 – +45	+2 – +50	750 x 750 x 1950	181	G ¾"	100-240 V ±10% / 1 Ph / 50 – 60 Hz
i.DC 23	2.30					750 x 750 x 1950	220	G ¾"	
i.DC 34	3.40					1150 x 750 x 1970	308	G 1½"	
i.DC 52	5.20					1150 x 750 x 1980	398	G 1½"	
i.DC 67	6.70					1150 x 750 x 1980	421	G 1½"	
i.DC 84	8.40					1150 x 750 x 1990	531	G 2"	
i.DC 115	11.5					1150 x 750 x 1990	650	G 2"	
i.DC 140	14.0					1150 x 750 x 2000	815	G 2"	
i.DC 175	17.5		5 – 11			1500 x 1320 x 1910	965	DN 80	
i.DC 225	22.5					1500 x 1420 x 1930	1275	DN 80	
i.DC 275	27.5					1500 x 1470 x 2090	1525	DN 80	
i.DC 330	33.00					1500 x 1520 x 2125	1710	DN 80	
i.DC 395	39.5					1500 x 1720 x 2146	2080	DN 100	
i.DC 450	45.0					1700 x 1770 x 2225	2305	DN 100	
i.DC 610	61.0					1950 x 1920 x 2258	2755	DN 150	
i.DC 870	87.0					2400 x 2140 x 2456	4105	DN 150	
i.DC 1190	119.0					2690 x 2335 x 2701	6200	DN 200	
i.DC 1555	155.5					2820 x 2504 x 2536	6800	DN 200	

*) As per ISO 7183, Option A1

Options

	i.DC 16 – 140	i.DC 175 – 1555
Load-dependent control via pressure dew point sensor	Option	Option
16 bar working pressure	Standard	Option
System housing	Option	–
Indoor installation to -20 °C, comprising system housing with resistance heating	Option	–
Sound insulation ≤ 85 dB(A): i.DC 16 – 140: Housing lined with acoustic foam and mesh base i.DC 175 – 1555: Silencer in sound enclosure; please note: larger footprint	Option	Option
Alternative colour scheme: Yellow components in RAL paint colour	Option	Option
Paint in corrosion protection class C3 medium (160 µm) or C5 medium (240 µm) as per DIN EN ISO 12944; painting of the exterior surfaces of the system housing and desiccant chambers	Option	Option
Silicone-free as per VW test standard PV 3.10.7	Option	Option
Equipped with one safety valve per desiccant chamber	Option	Option
Special pressure vessel inspections (e.g. ASME) upon request	Option	Option

Calculating flow rate

Correction factors for deviating operating conditions (flow rate in m³/min x k...)

Deviating working pressure at dryer inlet p												
p bar(g)	5	6	7	8	9	10	11	12	13	14	15	16
k_p	0.75	0.88	1.00	1.06	1.12	1.17	1.22	1.27	1.32	1.37	1.41	1.46

Compressed air inlet temperature T_i						
Temperature (°C)	25	30	35	40	45	50
k_i	1.00	1.00	1.00	0.96	0.90	0.83

Example:				
Working pressure	8 bar	->	Factor	1.06
Compressed air inlet temperature	+40°C	->	Factor	0.96

Model i.DC 1190 with flow rate of 119.0 m³/min
Max. possible flow rate under following operating conditions
V_{max} Operation = $V_{Reference}$ x k_p x k_i
V_{max} Operation = 88.50 m³/min x 1.06 x 0.96 = 90.06 m³/min

More compressed air for less energy

The world is our home

As one of the world's largest manufacturers of compressors, blowers and compressed air systems, KAESER KOMPRESSOREN is represented throughout the world by a comprehensive network of wholly owned subsidiaries and authorised distribution partners in over 140 countries.

By offering innovative, efficient and reliable products and services, KAESER KOMPRESSOREN's experienced consultants and engineers work in close partnership with customers to enhance their competitive edge and to develop progressive system concepts that continuously push the boundaries of performance and technology. Moreover, decades of knowledge and expertise from this industry-leading systems provider are made available to each and every customer via the KAESER group's advanced global IT network.

These advantages, coupled with KAESER's worldwide service organisation, ensure that every product operates at the peak of its performance at all times, providing optimal efficiency and maximum availability.

KAESER KOMPRESSOREN SE
P.O. Box 2143 – 96410 Coburg – GERMANY – Tel +49 9561 640-0 – Fax +49 9561 640-130
E-mail: productinfo@kaeser.com – www.kaeser.com

P-721ED Specifications subject to change without notice .15/23